Cable Trays - System of Side Height H50

Integrated Perforated Cable Trays - Return Flanges

Geçmeli Tip Kablo Kanalı - Интегрированные Перфорированные лотки

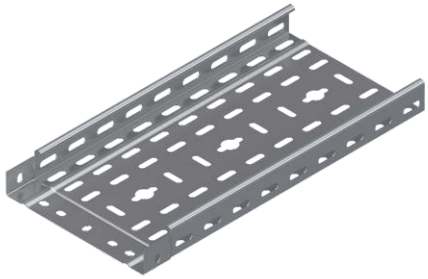

Important!
Joining cable tray sections together only use Screw Sets CFS M6 or CFS M8

Pre - Galvanised

GPK ... H50			0.6mm	
CODE	Width a mm	Length L mm	kg 1 mt	pcs
GPK 505 06 PG	50	3000	0.64	2
GPK 507 06 PG	75	3000	0.73	2
GPK 510 06 PG	100	3000	0.82	2
GPK 512 06 PG	125	3000	0.92	2
GPK 515 06 PG	150	3000	1.02	2
GPK 520 06 PG	200	3000	1.20	2
			0.7mm	
CODE	Width a mm	Length L mm	kg 1 mt	pcs
GPK 505 07 PG	50	3000	0.80	2
GPK 507 07 PG	75	3000	0.91	2
GPK 510 07 PG	100	3000	1.02	2
GPK 512 07 PG	125	3000	1.14	2
GPK 515 07 PG	150	3000	1.26	2
GPK 520 07 PG	200	3000	1.49	2

GPK ... H50			0.8mm	
CODE	Width a mm	Length L mm	kg 1 mt	pcs
GPK 505 08 PG	50	3000	0.84	2
GPK 507 08 PG	75	3000	0.97	2
GPK 510 08 PG	100	3000	1.10	2
GPK 512 08 PG	125	3000	1.22	2
GPK 515 08 PG	150	3000	1.34	2
GPK 520 08 PG	200	3000	1.60	2
GPK 522 08 PG	225	3000	1.72	2
GPK 525 08 PG	250	3000	1.85	2
GPK 530 08 PG	300	3000	2.10	2
			1.0mm	
GPK 505 10 PG	50	3000	1.05	2
GPK 507 10 PG	75	3000	1.20	2
GPK 510 10 PG	100	3000	1.36	2
GPK 512 10 PG	125	3000	1.52	2
GPK 515 10 PG	150	3000	1.67	2
GPK 520 10 PG	200	3000	1.99	2
GPK 522 10 PG	225	3000	2.14	2
GPK 525 10 PG	250	3000	2.30	2
GPK 530 10 PG	300	3000	2.62	2
GPK 540 10 PG	400	3000	3.25	2
			1.2mm	
GPK 545 12 PG	450	3000	4.27	2
GPK 550 12 PG	500	3000	4.65	2
GPK 560 12 PG	600	3000	5.40	2

MATERIAL
Steel, strip-galv. acc. to the Sendzimir method to TS-EN 10346:2011 (PG)

Thickn. (ga) [mm]: 0.6 | 0.7 | 0.8 | 1.0 | 1.2

GPK H50

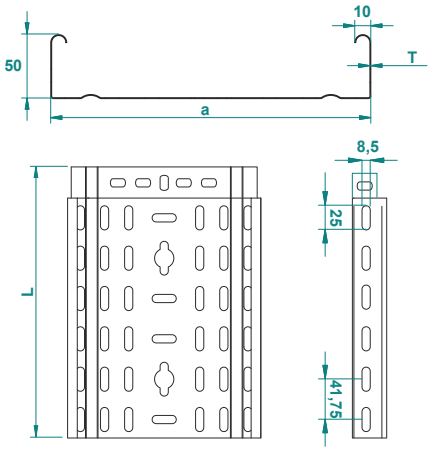

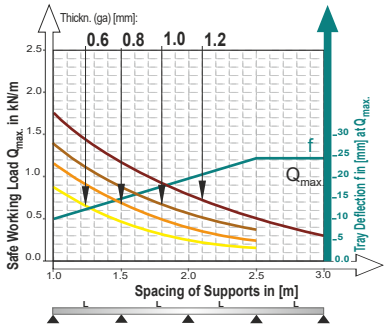

This diagram comply with IEC 61537 with connection to 1/5 of the span and the end span =0,8x the span
Q = max. admissible load (kg/m)
L = support distance (m)
f = Deflection (mm) / Max. deflection = L/100
Safetly co-efficient = 1.5

Width	Usable Cross-Section
50	23 cm²
100	48 cm²
150	73 cm²
200	98 cm²
300	148 cm²
400	198 cm²
500	248 cm²
600	298 cm²

Mounting Example

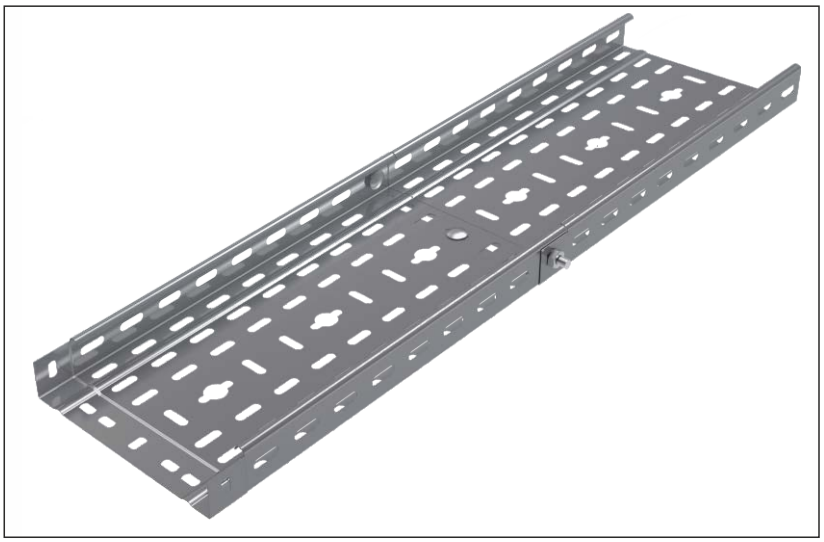

Recommended Quantities of Bolt and Nut For Integrated Cable Tray Connections

Width Of Cable Tray W \ H	40	50	60	75	80	85	100
50	2 Sets	2 Sets	2 Sets	–	–	–	–
100	3 Sets	3 Sets	3 Sets	5 Sets	5 Sets	5 Sets	5 Sets
150	3 Sets	3 Sets	3 Sets	5 Sets	5 Sets	5 Sets	5 Sets
200	3 Sets	3 Sets	3 Sets	5 Sets	5 Sets	5 Sets	5 Sets
250	3 Sets	3 Sets	3 Sets	5 Sets	5 Sets	5 Sets	5 Sets
300	3 Sets	3 Sets	3 Sets	5 Sets	5 Sets	5 Sets	5 Sets
400	5 Sets	5 Sets	5 Sets	7 Sets	7 Sets	7 Sets	7 Sets
500	5 Sets	5 Sets	5 Sets	7 Sets	7 Sets	7 Sets	7 Sets
600	5 Sets	5 Sets	5 Sets	7 Sets	7 Sets	7 Sets	7 Sets

Recommended Quantities of Bolt and Nut For Integrated Cable Tray Connections

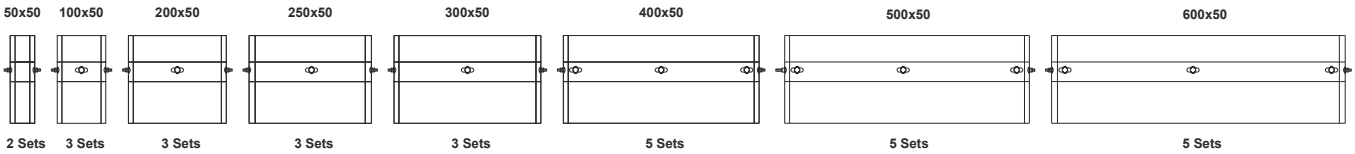

Cable Trays - System of Side Height H50

Integrated Non Perforated Cable Trays - Return Flanges

Geçmeli Tip Deliksiz Kablo Kanalı - Интегрированные Сплошные лотки

Important!
Joining cable tray sections together only use
Screw Sets CFS M6 or CFS M8

Pre - Galvanised

GDK ... H50			0.6mm	
CODE	Width a mm	Length L mm	kg 1 mt	pcs
GDK 505 06 PG	50	3000	0.80	2
GDK 507 06 PG	75	3000	0.91	2
GDK 510 06 PG	100	3000	1.03	2
GDK 512 06 PG	125	3000	1.15	2
GDK 515 06 PG	150	3000	1.27	2
GDK 520 06 PG	200	3000	1.5	2
			0.7mm	
CODE	Width a mm	Length L mm	kg 1 mt	pcs
GDK 505 07 PG	50	3000	0.93	2
GDK 507 07 PG	75	3000	1.07	2
GDK 510 07 PG	100	3000	1.20	2
GDK 512 07 PG	125	3000	1.34	2
GDK 515 07 PG	150	3000	1.48	2
GDK 520 07 PG	200	3000	1.75	2

GDK ... H50			0.8mm	
CODE	Width a mm	Length L mm	kg 1 mt	pcs
GDK 505 08 PG	50	3000	1.05	2
GDK 507 08 PG	75	3000	1.21	2
GDK 510 08 PG	100	3000	1.37	2
GDK 512 08 PG	125	3000	1.52	2
GDK 515 08 PG	150	3000	1.68	2
GDK 520 08 PG	200	3000	2.00	2
GDK 522 08 PG	225	3000	2.15	2
GDK 525 08 PG	250	3000	2.31	2
GDK 530 08 PG	300	3000	2.62	2
			1.0mm	
GDK 505 10 PG	50	3000	1.31	2
GDK 507 10 PG	75	3000	1.50	2
GDK 510 10 PG	100	3000	1.70	2
GDK 512 10 PG	125	3000	1.90	2
GDK 515 10 PG	150	3000	2.09	2
GDK 520 10 PG	200	3000	2.49	2
GDK 522 10 PG	225	3000	2.68	2
GDK 525 10 PG	250	3000	2.88	2
GDK 530 10 PG	300	3000	3.27	2
GDK 540 10 PG	400	3000	4.06	2
			1.2mm	
GDK 545 12 PG	450	3000	5.34	2
GDK 550 12 PG	500	3000	5.81	2
GDK 560 12 PG	600	3000	6.75	2

MATERIAL
Steel, strip-galv. acc. to the Sendzimir method
to TS-EN 10346:2011 (PG)

Thickn. (ga) [mm]: 0.6 | 0.7 | 0.8 | 1.0 | 1.2

GDK H50

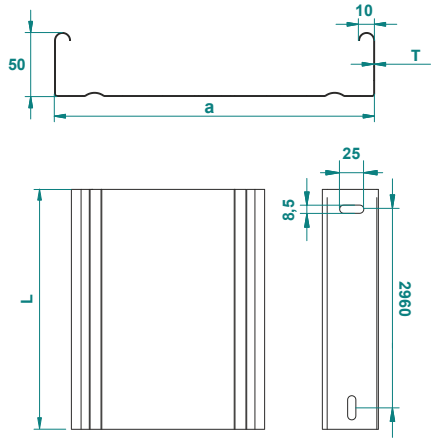

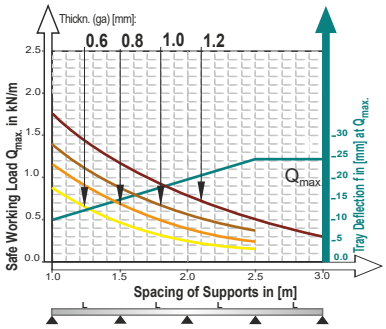

This diagram comply with IEC 61537 with connection to 1/5 of the span and the end span =0,8x the span
Q = max. admissible load (kg/m)
L = support distance (m)
f = Deflection (mm) / Max. deflection = L/100
Safetly co-efficient = 1.5

Width	Usable Cross-Section
50	23 cm²
100	48 cm²
150	73 cm²
200	98 cm²
300	148 cm²
400	198 cm²
500	248 cm²
600	298 cm²

Mounting Example

Recommended Quantities of Bolt and Nut For Integrated Cable Tray Connections

Width Of Cable Tray W \ H	40	50	60	75	80	85	100
50	2 Sets	2 Sets	2 Sets	–	–	–	–
100	3 Sets	3 Sets	3 Sets	5 Sets	5 Sets	5 Sets	5 Sets
150	3 Sets	3 Sets	3 Sets	5 Sets	5 Sets	5 Sets	5 Sets
200	3 Sets	3 Sets	3 Sets	5 Sets	5 Sets	5 Sets	5 Sets
250	3 Sets	3 Sets	3 Sets	5 Sets	5 Sets	5 Sets	5 Sets
300	3 Sets	3 Sets	3 Sets	5 Sets	5 Sets	5 Sets	5 Sets
400	5 Sets	5 Sets	5 Sets	7 Sets	7 Sets	7 Sets	7 Sets
500	5 Sets	5 Sets	5 Sets	7 Sets	7 Sets	7 Sets	7 Sets
600	5 Sets	5 Sets	5 Sets	7 Sets	7 Sets	7 Sets	7 Sets

Recommended Quantities of Bolt and Nut For Integrated Cable Tray Connections

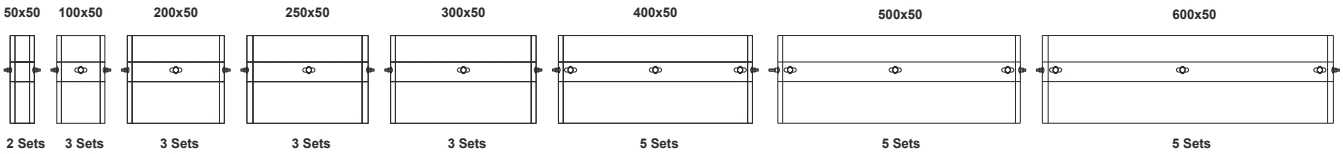

Cable Trays - System of Side Height H50

Perforated Cable Trays - Return Flanges

Ağır Hizmet Kablo Kanalı - Перфорированные лотки

Important!
Joining cable tray sections together only through the use of couplers 2 pcs for 1 Lenght
To install cable tray - straight use Screw Sets CFS M6 or CFS M8

Pre - Galvanised

APK ... H50			0.6mm	
CODE	Width a mm	Length L mm	kg 1 mt	pcs
APK 505 06 PG	50	3000	0.64	2
APK 507 06 PG	75	3000	0.73	2
APK 510 06 PG	100	3000	0.82	2
APK 512 06 PG	125	3000	0.92	2
APK 515 06 PG	150	3000	1.02	2
APK 520 06 PG	200	3000	1.20	2
			0.8mm	
APK 505 08 PG	50	3000	0.84	2
APK 507 08 PG	75	3000	0.97	2
APK 510 08 PG	100	3000	1.10	2
APK 512 08 PG	125	3000	1.22	2
APK 515 08 PG	150	3000	1.34	2
APK 520 08 PG	200	3000	1.60	2
APK 522 08 PG	225	3000	1.72	2
APK 525 08 PG	250	3000	1.85	2
APK 530 08 PG	300	3000	2.10	2
			1.0mm	
APK 505 10 PG	50	3000	1.05	2
APK 507 10 PG	75	3000	1.20	2
APK 510 10 PG	100	3000	1.36	2
APK 512 10 PG	125	3000	1.52	2
APK 515 10 PG	150	3000	1.67	2
APK 520 10 PG	200	3000	1.99	2
APK 522 10 PG	225	3000	2.14	2
APK 525 10 PG	250	3000	2.30	2
APK 530 10 PG	300	3000	2.62	2
APK 540 10 PG	400	3000	3.25	2

APK ... H50			1.2mm	
CODE	Width a mm	Length L mm	kg 1 mt	pcs
APK 505 12 PG	50	3000	1.26	2
APK 507 12 PG	75	3000	1.44	2
APK 510 12 PG	100	3000	1.63	2
APK 512 12 PG	125	3000	1.82	2
APK 515 12 PG	150	3000	2.01	2
APK 520 12 PG	200	3000	2.38	2
APK 522 12 PG	225	3000	2.58	2
APK 525 12 PG	250	3000	2.76	2
APK 530 12 PG	300	3000	3.14	2
APK 540 12 PG	400	3000	3.90	2
APK 545 12 PG	450	3000	4.27	2
APK 550 12 PG	500	3000	4.65	2
APK 560 12 PG	600	3000	5.40	2
			1.5mm	
APK 505 15 PG	50	3000	1.55	2
APK 507 15 PG	75	3000	1.78	2
APK 510 15 PG	100	3000	2.02	2
APK 512 15 PG	125	3000	2.26	2
APK 515 15 PG	150	3000	2.49	2
APK 520 15 PG	200	3000	2.96	2
APK 522 15 PG	225	3000	3.20	2
APK 525 15 PG	250	3000	3.43	2
APK 530 15 PG	300	3000	3.90	2
APK 540 15 PG	400	3000	4.85	2
APK 545 15 PG	450	3000	5.32	2
APK 550 15 PG	500	3000	5.78	2
APK 560 15 PG	600	3000	6.73	2

Straight Connector (Coupler)

Birleştirme Elemanı - Прямой соединитель

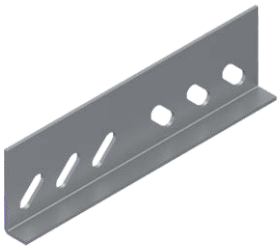

To Install one lenght ;use 2 pieces of KBE connector 8 sets of CFS bolts and nuts. (M6 or M8)

Pre - Galvanised

KBE 2 ... H50		1.2mm	
CODE	Length L mm	kg 1 pc	pcs
KBE 250 12 PG	175	0.09	100

KBE 2 ... H50		1.5mm	
CODE	Length L mm	kg 1 pc	pcs
KBE 250 15 PG	175	0.11	100

Electro - Galvanized

CFS M6			M6	
CODE	Size mm	Length L mm	kg 1Set	pcs
CFS M6 EG	M6	15	0,008	500

CFS M8			M8	
CODE	Size mm	Length L mm	kg 1Set	pcs
CFS M8 EG	M8	15	0,014	500

APK H50

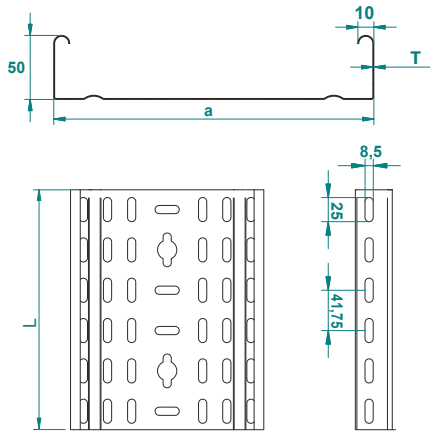

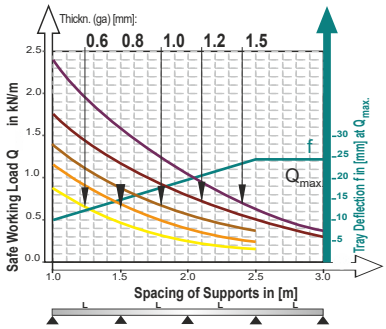

This diagram comply with IEC 61537 with connection to 1/5 of the span and the end span =0,8x the span
Q = max. admissible load (kg/m)
L = support distance (m)
f = Deflection (mm) / Max. deflection = L/100
Safetly co-efficient = 1.5

Width	Usable Cross-Section
50	23 cm²
100	48 cm²
150	73 cm²
200	98 cm²
300	148 cm²
400	198 cm²
500	248 cm²
600	298 cm²

KBE 2 H50

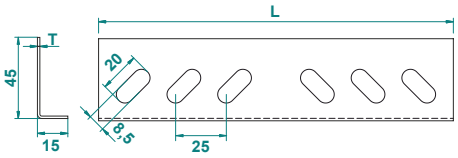

M6x15 Round head squire neck bolt & M6 Flanged nut

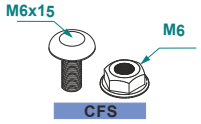

APPLICATIONS
Cable routing

MATERIAL
Steel, strip-galv. acc. to the Sendzimir method to TS-EN 10346:2011 (PG)

Available finishes:
HDG-steel, hot-dip galv. to TS-EN ISO 1461:2011 (HDG)
SS- stainless steel AISI 304L and AISI 316L (SS)
EP- powder coating in a full range of colours (RAL)

Thickn. (ga) [mm]: 0.6 0.8 1.0 1.2 1.5

Cable Trays - System of Side Height H50

Non Perforated Cable Trays - Return Flanges

Ağır Hizmet Deliksiz Kablo Kanalı - Сплошные лотки

Important!
Joining cable tray sections together only through the use of couplers 2 pcs for 1 Lenght
To install cable tray - straight use Screw Sets CFS M6 or CFS M8

Pre - Galvanised

ADK ... H50			0.6mm	
CODE	Width a mm	Length L mm	kg 1 mt	pcs
ADK 505 06 PG	50	3000	0.80	2
ADK 507 06 PG	75	3000	0.91	2
ADK 510 06 PG	100	3000	1.03	2
ADK 512 06 PG	125	3000	1.15	2
ADK 515 06 PG	150	3000	1.27	2
ADK 520 06 PG	200	3000	1.50	2
			0.8mm	
ADK 505 08 PG	50	3000	1.05	2
ADK 507 08 PG	75	3000	1.21	2
ADK 510 08 PG	100	3000	1.37	2
ADK 512 08 PG	125	3000	1.52	2
ADK 515 08 PG	150	3000	1.68	2
ADK 520 08 PG	200	3000	2.00	2
ADK 522 08 PG	225	3000	2.15	2
ADK 525 08 PG	250	3000	2.31	2
ADK 530 08 PG	300	3000	2.62	2
			1.0mm	
ADK 505 10 PG	50	3000	1.31	2
ADK 507 10 PG	75	3000	1.50	2
ADK 510 10 PG	100	3000	1.70	2
ADK 512 10 PG	125	3000	1.90	2
ADK 515 10 PG	150	3000	2.09	2
ADK 520 10 PG	200	3000	2.49	2
ADK 522 10 PG	225	3000	2.68	2
ADK 525 10 PG	250	3000	2.88	2
ADK 530 10 PG	300	3000	3.27	2
ADK 540 10 PG	400	3000	4.06	2

ADK ... H50			1.2mm	
CODE	Width a mm	Length L mm	kg 1 mt	pcs
ADK 505 12 PG	50	3000	1.57	2
ADK 507 12 PG	75	3000	1.80	2
ADK 510 12 PG	100	3000	2.04	2
ADK 512 12 PG	125	3000	2.28	2
ADK 515 12 PG	150	3000	2.51	2
ADK 520 12 PG	200	3000	2.98	2
ADK 522 12 PG	225	3000	3.22	2
ADK 525 12 PG	250	3000	3.45	2
ADK 530 12 PG	300	3000	3.92	2
ADK 540 12 PG	400	3000	4.87	2
ADK 545 12 PG	450	3000	5.34	2
ADK 550 12 PG	500	3000	5.81	2
ADK 560 12 PG	600	3000	6.75	2
			1.5mm	
ADK 505 15 PG	50	3000	1.94	2
ADK 507 15 PG	75	3000	2.23	2
ADK 510 15 PG	100	3000	2.52	2
ADK 512 15 PG	125	3000	2.82	2
ADK 515 15 PG	150	3000	3.11	2
ADK 520 15 PG	200	3000	3.70	2
ADK 522 15 PG	225	3000	4.00	2
ADK 525 15 PG	250	3000	4.29	2
ADK 530 15 PG	300	3000	4.88	2
ADK 540 15 PG	400	3000	6.06	2
ADK 545 15 PG	450	3000	6.65	2
ADK 550 15 PG	500	3000	7.23	2
ADK 560 15 PG	600	3000	8.41	2

Seperator

Seperatör - Перегородка

To Install Sepertor use CFS bolts and nuts. (M6 or M8)

Pre - Galvanised

SEP 1 ... H50		1.0mm	
CODE	Length L mm	kg 1m	pcs
SEP 150 10 PG	3000	0.5	1

SEP 1 ... H50		1.5mm	
CODE	Length L mm	kg 1m	pcs
SEP 150 15 PG	3000	0.75	1

ADK H50

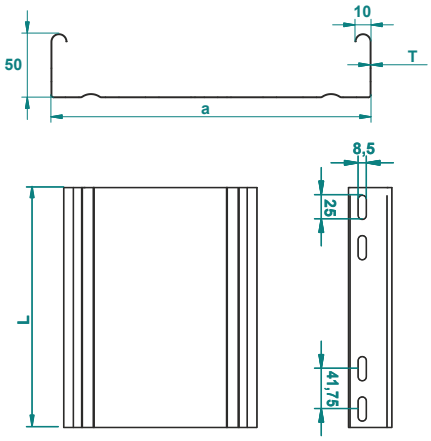

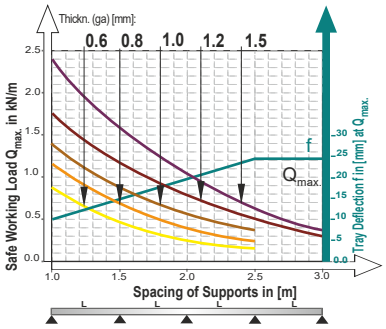

This diagram comply with IEC 61537 with connection to 1/5 of the span and the end span =0,8x the span
Q = max. admissible load (kg/m)
L = support distance (m)
f = Deflection (mm) / Max. deflection = L/100
Safetly co-efficient = 1.5

Width	Usable Cross-Section
50	23 cm²
100	48 cm²
150	73 cm²
200	98 cm²
300	148 cm²
400	198 cm²
500	248 cm²
600	298 cm²

SEP 1

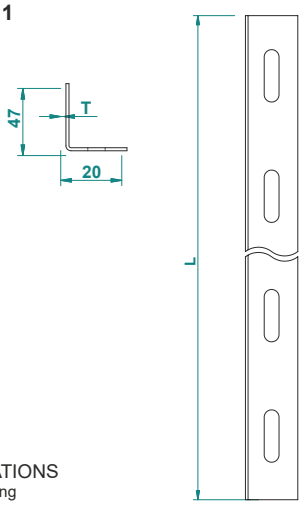

APPLICATIONS
Cable routing

MATERIAL
Steel, strip-galv. acc. to the Sendzimir method to TS-EN 10346:2011 (PG)

Available finishes:
HDG-steel, hot-dip galv. to TS-EN ISO 1461:2011 (HDG)
SS- stainless steel AISI 304L and AISI 316L (SS)
EP- powder coating in a full range of colours (RAL)

Thickn. (ga) [mm]: 0.6 0.8 1.0 1.2 1.5

90° Horizontal Bend of Cable Tray

90° Yatay Kanal Dönüş Elemanı - Угол горизонтальный 90°

Important!
To install cable tray - bend use Screw Sets CFS M6 or CFS M8

Pre - Galvanised

KA90 ... H50		1.0mm	
CODE	Width a=b mm	kg 1 pc	pcs
KA90 505 10 PG	50	0.25	1
KA90 507 10 PG	75	0.32	1
KA90 510 10 PG	100	0.47	1
KA90 512 10 PG	125	0.57	1
KA90 515 10 PG	150	0.66	1
KA90 520 10 PG	200	0.88	1
KA90 522 10 PG	225	1.01	1
KA90 525 10 PG	250	1.14	1
		1.2mm	
KA90 530 12 PG	300	1.81	1
KA90 540 12 PG	400	2.62	1
KA90 545 12 PG	450	3.09	1
KA90 450 12 PG	500	3.58	1
KA90 560 12 PG	600	4.70	1

KA90 ... H50		1.5mm	
CODE	Width a=b mm	kg 1 pc	pcs
KA90 505 15 PG	50	0.38	1
KA90 507 15 PG	75	0.48	1
KA90 510 15 PG	100	0.71	1
KA90 512 15 PG	125	0.85	1
KA90 515 15 PG	150	0.99	1
KA90 520 15 PG	200	1.33	1
KA90 522 15 PG	225	1.50	1
KA90 525 15 PG	250	1.70	1
KA90 530 15 PG	300	2.26	1
KA90 540 15 PG	400	3.28	1
KA90 545 15 PG	450	3.86	1
KA90 550 15 PG	500	4.49	1
KA90 560 15 PG	600	5.88	1

KA90 H50

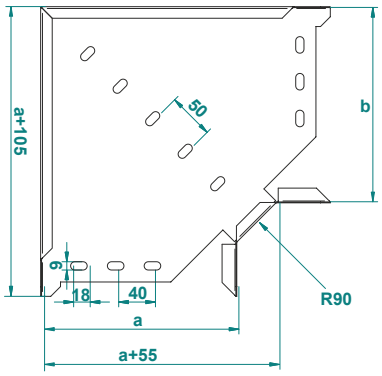

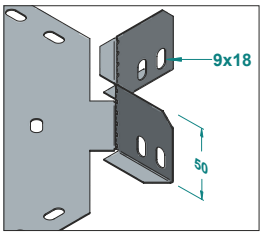

45° Horizontal Bend of Cable Tray

45° Yatay Kanal Dönüş Elemanı - Угол горизонтальный 45°

Important!
To install cable tray - bend use Screw Sets CFS M6 or CFS M8

Pre - Galvanised

KA45 ... H50		1.0mm	
CODE	Width a=b mm	kg 1 pc	pcs
KA45 505 10 PG	50	0.26	1
KA45 507 10 PG	75	0.33	1
KA45 510 10 PG	100	0.41	1
KA45 512 10 PG	125	0.53	1
KA45 515 10 PG	150	0.62	1
KA45 520 10 PG	200	0.85	1
KA45 522 10 PG	225	0.97	1
KA45 525 10 PG	250	1.10	1
		1.2mm	
KA45 530 12 PG	300	1.65	1
KA45 540 12 PG	400	2.43	1
KA45 545 12 PG	450	2.88	1
KA45 550 12 PG	500	3.37	1
KA45 560 12 PG	600	4.45	1

KA45 ... H50		1.5mm	
CODE	Width a=b mm	kg 1 pc	pcs
KA45 505 15 PG	50	0.39	1
KA45 507 15 PG	75	0.50	1
KA45 510 15 PG	100	0.61	1
KA45 512 15 PG	125	0.80	1
KA45 515 15 PG	150	0.94	1
KA45 520 15 PG	200	1.26	1
KA45 522 15 PG	225	1.45	1
KA45 525 15 PG	250	1.64	1
KA45 530 15 PG	300	2.06	1
KA45 540 15 PG	400	3.04	1
KA45 545 15 PG	450	3.60	1
KA45 550 15 PG	500	4.21	1
KA45 560 15 PG	600	5.56	1

KA45 H50

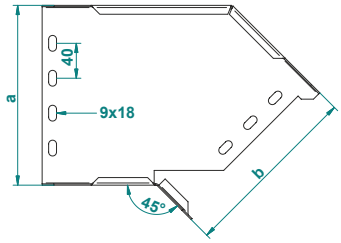

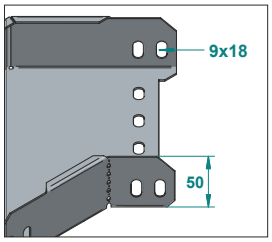

APPLICATIONS
Cable routing

MATERIAL
Steel, strip-galv. acc. to the Sendzimir method to TS-EN 10346:2011 (PG)

Available finishes:
HDG-steel, hot-dip galv. to TS-EN ISO 1461:2011 (HDG)
SS- stainless steel AISI 304L and AISI 316L (SS)
EP- powder coating in a full range of colours (RAL)

Thickn. (ga) [mm]: 0.6 | 0.8 | 1.0 | 1.2 | 1.5

Tee Horizontal Bend of Cable Tray

"T" Yatay Kanal Dönüş Elemanı - Т-отвод горизонтальный

Important!
To install cable tray - bend use Screw Sets CFS M6 or CFS M8

Pre - Galvanised

KAT ... H50		1.0mm	
CODE	Width a=b=c mm	kg 1 pc	pcs
KAT 505 10 PG	50	0.32	1
KAT 507 10 PG	75	0.39	1
KAT 510 10 PG	100	0.59	1
KAT 512 10 PG	125	0.70	1
KAT 515 10 PG	150	0.81	1
KAT 520 10 PG	200	1.05	1
KAT 522 10 PG	225	1.18	1
KAT 525 10 PG	250	1.32	1
		1.2mm	
KAT 530 12 PG	300	2.16	1
KAT 540 12 PG	400	3.05	1
KAT 545 12 PG	450	3.54	1
KAT 550 12 PG	500	4.08	1
KAT 560 12 PG	600	5.27	1

KAT ... H50		1.5mm	
CODE	Width a=b=c mm	kg 1 pc	pcs
KAT 505 15 PG	50	0.48	1
KAT 507 15 PG	75	0.59	1
KAT 510 15 PG	100	0.90	1
KAT 512 15 PG	125	1.05	1
KAT 515 15 PG	150	1.21	1
KAT 520 15 PG	200	1.57	1
KAT 522 15 PG	225	1.77	1
KAT 525 15 PG	250	1.98	1
KAT 530 15 PG	300	2.70	1
KAT 540 15 PG	400	3.81	1
KAT 545 15 PG	450	4.43	1
KAT 550 15 PG	500	5.10	1
KAT 560 15 PG	600	6.58	1

Cross Bend of Cable Tray

4'lü Bağlantı Elemanı- Крестовина

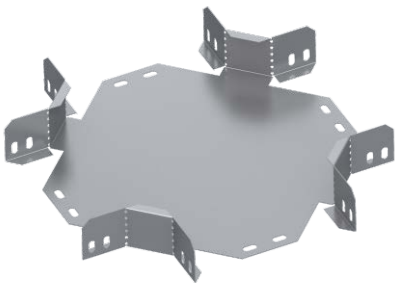

Important!
To install cable tray - bend use Screw Sets CFS M6 or CFS M8

Pre - Galvanised

KAD ... H50		1.0mm	
CODE	Width a=b=c=d mm	kg 1 pc	pcs
KAD 505 10 PG	50	0.41	1
KAD 507 10 PG	75	0.50	1
KAD 510 10 PG	100	0.74	1
KAD 512 10 PG	125	0.86	1
KAD 515 10 PG	150	0.98	1
KAD 520 10 PG	200	1.24	1
KAD 522 10 PG	225	1.38	1
KAD 525 10 PG	250	1.54	1
		1.2mm	
KAD 530 12 PG	300	2.58	1
KAD 540 12 PG	400	3.54	1
KAD 545 12 PG	450	4.07	1
KAD 550 12 PG	500	4.64	1
KAD 560 12 PG	600	5.90	1

KAD ... H50		1.5mm	
CODE	Width a=b=c=d mm	kg 1 pc	pcs
KAD 505 15 PG	50	0.62	1
KAD 507 15 PG	75	0.74	1
KAD 510 15 PG	100	0.12	1
KAD 512 15 PG	125	1.29	1
KAD 515 15 PG	150	1.47	1
KAD 520 15 PG	200	1.86	1
KAD 522 15 PG	225	1.08	1
KAD 525 15 PG	250	2.31	1
KAD 530 15 PG	300	3.22	1
KAD 540 15 PG	400	4.42	1
KAD 545 15 PG	450	4.09	1
KAD 550 15 PG	500	5.81	1
KAD 560 15 PG	600	7.38	1

KAT H50

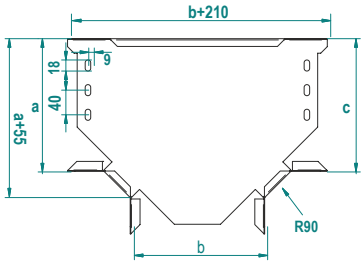

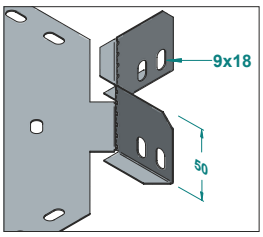

KAD H50

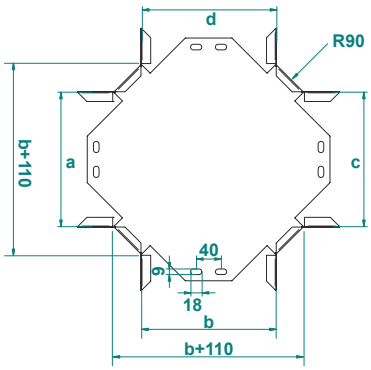

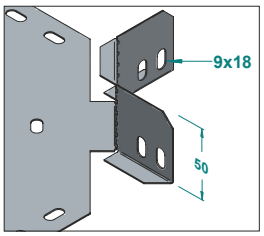

APPLICATIONS
Cable routing

MATERIAL
Steel, strip-galv. acc. to the Sendzimir method to TS-EN 10346:2011 (PG)

Available finishes:
HDG-steel, hot-dip galv. to TS-EN ISO 1461:2011 (HDG)
SS- stainless steel AISI 304L and AISI 316L (SS)
EP- powder coating in a full range of colours (RAL)

Thickn. (ga) [mm]: 0.6 | 0.8 | 1.0 | 1.2 | 1.5

Cable Trays - System of Side Height H50

Vertical Outside Bend of Cable Tray (Flexible)

Kanal Dış Bükey - Арка универсальная, внешний изгиб

Important!
To install vertical bend - use 2 pieces of KBE connectors and 4 sets of CFS bolts and nuts (M6 or M8).

Pre - Galvanised

KADB ... H50			1.0mm	
CODE	Width a mm	Length L mm	kg 1 pc	pcs
KADB 505 10 PG	50	600	0.66	1
KADB 507 10 PG	75	600	0.75	1
KADB 510 10 PG	100	600	0.85	1
KADB 512 10 PG	125	600	0.95	1
KADB 515 10 PG	150	600	1.05	1
KADB 520 10 PG	200	600	1.25	1
KADB 522 10 PG	225	600	1.34	1
KADB 525 10 PG	250	600	1.44	1
			1.2mm	
KADB 530 12 PG	300	600	1.96	1
KADB 540 12 PG	400	600	2.92	1
KADB 545 12 PG	450	600	3.20	1
KADB 550 12 PG	500	600	3.49	1
KADB 560 12 PG	600	600	4.05	1

KADB ... H50			1.5mm	
CODE	Width a mm	Length L mm	kg 1 pc	pcs
KADB 505 15 PG	50	600	0.97	1
KADB 507 15 PG	75	600	1.12	1
KADB 510 15 PG	100	600	1.26	1
KADB 512 15 PG	125	600	1.41	1
KADB 515 15 PG	150	600	1.56	1
KADB 520 15 PG	200	600	1.86	1
KADB 522 15 PG	225	600	2.00	1
KADB 525 15 PG	250	600	2.14	1
KADB 530 15 PG	300	600	2.44	1
KADB 540 15 PG	400	600	3.63	1
KADB 545 15 PG	450	600	3.99	1
KADB 550 15 PG	500	600	4.34	1
KADB 560 15 PG	600	600	5.05	1

Vertical Inside Bend of Cable Tray (Flexible)

Kanal İç Bükey- Арка универсальная, внутренний изгиб

Important!
To install vertical bend - use 2 pieces of KBE connectors and 4 sets of CFS bolts and nuts (M6 or M8).

Pre - Galvanised

KAIB ... H50			1.0mm	
CODE	Width a mm	Length L mm	kg 1 pc	pcs
KAIB 505 10 PG	50	600	0.66	1
KAIB 507 10 PG	75	600	0.75	1
KAIB 510 10 PG	100	600	0.85	1
KAIB 512 10 PG	125	600	0.95	1
KAIB 515 10 PG	150	600	1.05	1
KAIB 520 10 PG	200	600	1.25	1
KAIB 522 10 PG	225	600	1.34	1
KAIB 525 10 PG	250	600	1.44	1
			1.2mm	
KAIB 530 12 PG	300	600	1.96	1
KAIB 540 12 PG	400	600	2.92	1
KAIB 545 12 PG	450	600	3.02	1
KAIB 550 12 PG	500	600	3.49	1
KAIB 560 12 PG	600	600	4.05	1

KAIB ... H50			1.5mm	
CODE	Width a mm	Length L mm	kg 1 pc	pcs
KAIB 505 15 PG	50	600	0.97	1
KAIB 507 15 PG	75	600	1.12	1
KAIB 510 15 PG	100	600	1.26	1
KAIB 512 15 PG	125	600	1.41	1
KAIB 515 15 PG	150	600	1.56	1
KAIB 520 15 PG	200	600	1.86	1
KAIB 522 15 PG	225	600	2.00	1
KAIB 525 15 PG	250	600	**2.14**	1
KAIB 530 15 PG	300	600	2.44	1
KAIB 540 15 PG	400	600	3.63	1
KAIB 545 15 PG	450	600	3.99	1
KAIB 550 15 PG	500	600	4.34	1
KAIB 560 15 PG	600	600	5.05	1

KADB H50

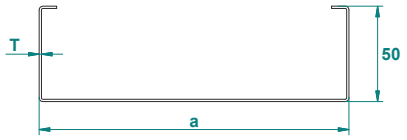

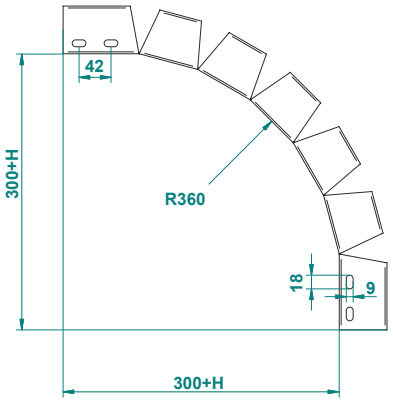

KADB and KAIB are the same items, shipped flat.
To install - Bend manually during application.
in Flat Lenght = 600mm

KAIB H50

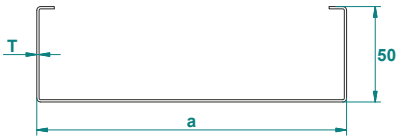

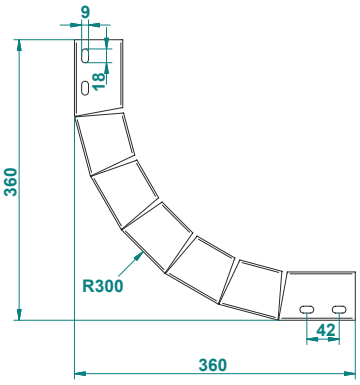

KADB and KAIB are the same items, shipped flat.
To install - Bend manually during application.
in Flat Lenght = 600mm

APPLICATIONS
Cable routing

MATERIAL
Steel, strip-galv. acc. to the Sendzimir method
to TS-EN 10346:2011 (PG)

Available finishes:
HDG-steel, hot-dip galv. to TS-EN ISO 1461:2011 (HDG)
SS- stainless steel AISI 304L and AISI 316L (SS)
EP- powder coating in a full range of colours (RAL)

Thickn. (ga) [mm]: 0.6 | 0.8 | 1.0 | 1.2 | 1.5

MADE IN TURKEY

Add On 90º Horizontal Corner Bend of Cable Tray

90º Köşe Yatay Kanal Dönüş Eki - Угол 90º врезной

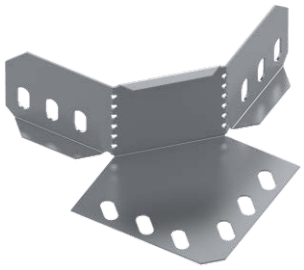

Important!
To install cable tray - bend use Screw Sets CFS M6 or CFS M8

Pre - Galvanised

KA90E ... H50			1.0mm	
CODE	a mm	Radius R mm	kg 1 pc	pcs
KA90E 5 10 PG	55	90	0.16	1
KA90ER1 5 10 PG	90	150	0.24	1
KA90ER2 5 10 PG	180	300	0.51	1

KA90E ... H50			1.5mm	
CODE	a mm	Radius R mm	kg 1 pc	pcs
KA90E 5 15 PG	55	90	0.24	1
KA90ER1 5 15 PG	90	150	0.37	1
KA90ER2 5 15 PG	180	300	0.76	1

Add on tee horizontal bend

"T" yatay kanal dönüş eki - Т-отвод горизонтальный врезной

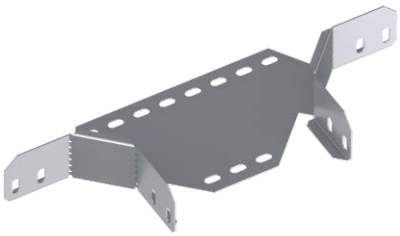

Important!
To install cable tray - bend use Screw Sets CFS M6 or CFS M8

Pre - Galvanised

KATE ... H50			1.0mm	
CODE	Width a mm	Radius R mm	kg 1 pc	pcs
KATE 510 10 PG	100	90	0.36	1
KATE 512 10 PG	125	90	0.38	1
KATE 515 10 PG	150	90	0.41	1
KATE 520 10 PG	200	90	0.46	1
KATE 522 10 PG	225	90	0.49	1
KATE 525 10 PG	250	90	0.51	1
			1.2mm	
CODE	Width a mm	Radius R mm	kg 1 pc	pcs
KATE 530 12 PG	300	90	0.67	1
KATE 540 12 PG	400	90	0.79	1
KATE 545 12 PG	450	90	0.86	1
KATE 550 12 PG	500	90	0.92	1
KATE 560 12 PG	600	90	1.04	1

KATE ... H50			1.5mm	
CODE	Width a mm	Radius R mm	kg 1 pc	pcs
KATER1 510 15 PG	100	150	1.05	1
KATER1 512 15 PG	125	150	1.11	1
KATER1 515 15 PG	150	150	1.18	1
KATER1 520 15 PG	200	150	1.30	1
KATER1 522 15 PG	225	150	1.36	1
KATER1 525 15 PG	250	150	1.42	1
KATER1 530 15 PG	300	150	1.54	1
KATER1 540 15 PG	400	150	1.78	1
KATER1 545 15 PG	450	150	1.91	1
KATER1 550 15 PG	500	150	2.03	1
KATER1 560 15 PG	600	150	2.28	1

KA90E Mounting

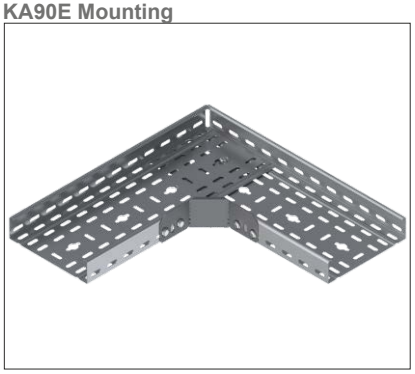

KATE Mounting

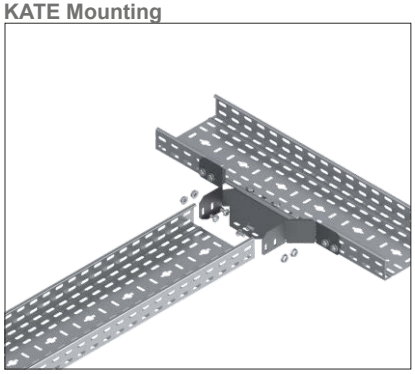

KA90E H50

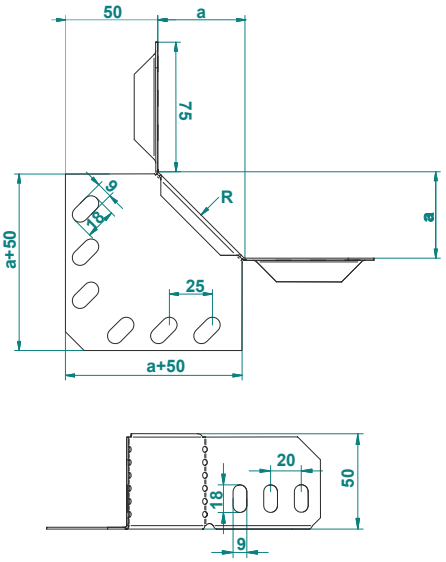

KATE

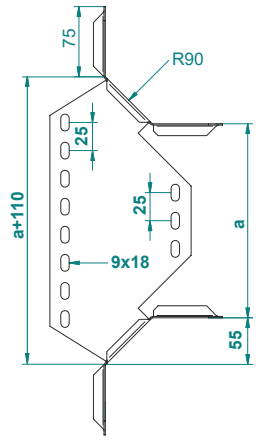

KATER1

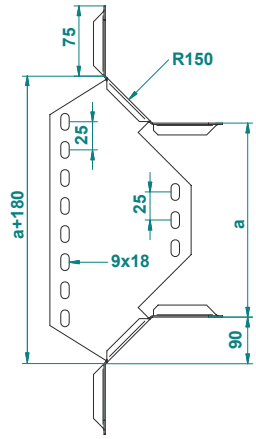

APPLICATIONS
Cable routing

MATERIAL
Steel, strip-galv. acc. to the Sendzimir method to TS-EN 10346:2011 (PG)

Available finishes:
HDG-steel, hot-dip galv. to TS-EN ISO 1461:2011 (HDG)
SS- stainless steel AISI 304L and AISI 316L (SS)
EP- powder coating in a full range of colours (RAL)

Thickn. (ga) [mm]: 0.6 | 0.8 | 1.0 | 1.2 | 1.5

Adjustable Vertical Connector (2 Pcs)

Dikey Seviye Degistirme Eki (2 Adet) - Шарнирный соединитель для лотка

To Install one lenght; use 2 pieces of BDD connector and 10 sets of CFS bolts and nuts. (M6 or M8)

Pre - Galvanised

BDD 2 ... H50		1.2mm	
CODE	Length L mm	kg 1 pc	pcs
BDD 250 12 PG	250	0.16	1

BDD 2 ... H50		1.5mm	
CODE	Length L mm	kg 1 pc	pcs
BDD 250 15 PG	250	0.2	1

Adjustable Horizontal Connector

Yatay Seviye Değiştirme Eki - Угловой соединитель

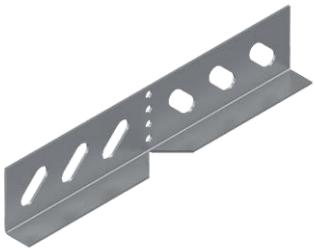

To Install one lenght; use 2 pieces of BYD connector and 8 sets of CFS bolts and nuts. (M6 or M8)

Pre - Galvanised

BYD 2 ... H50		1.2mm	
CODE	Length L mm	kg 1 pc	pcs
BYD 250 12 PG	175	0.09	1

BYD 2 ... H50		1.5mm	
CODE	Length L mm	kg 1 pc	pcs
BYD 250 15 PG	175	0.11	1

Adjustable horizontal connector - Long Type

Yatay seviye değiştirme eki uzun tip - Угловой соединитель - длинный

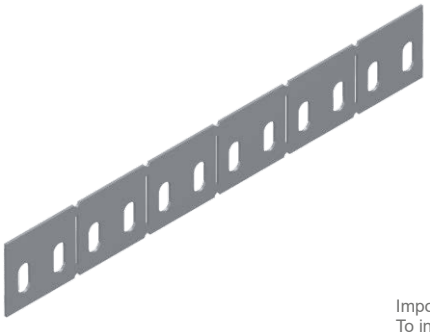

Important!
To install cable tray - connector use Screw Sets CFS M6 or CFS M8

Pre - Galvanised

BYDU 1 ... H50		1.2mm	
CODE	Length L mm	kg 1 pc	pcs
BYDU 150 12 PG	1000	0.3	1

BYDU 1 ... H50		1.5mm	
CODE	Length L mm	kg 1 pc	pcs
BYDU 150 15 PG	1000	0.38	1

BDD 2 H50

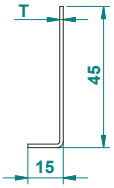

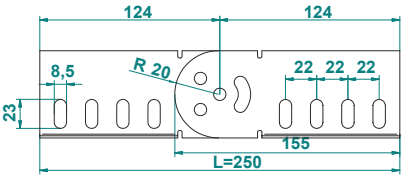

BYD 2 H50

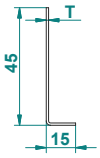

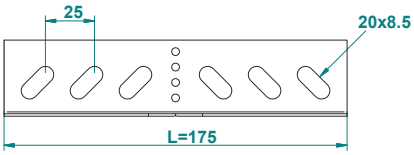

BYDU 1 H50

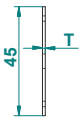

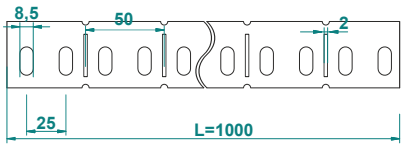

APPLICATIONS
Cable routing

MATERIAL
Steel, strip-galv. acc. to the Sendzimir method to TS-EN 10346:2011 (PG)

Available finishes:
HDG-steel, hot-dip galv. to TS-EN ISO 1461:2011 (HDG)
SS- stainless steel AISI 304L and AISI 316L (SS)
EP- powder coating in a full range of colours (RAL)

Thickn. (ga) [mm]: 0.6 0.8 1.0 1.2 1.5

Reducer Connector - Single Type

Reduksiyon Eki (Tek) - Редукционный переходник

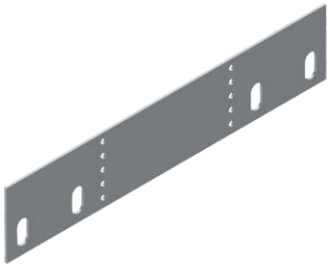

Pre - Galvanised

Important!
To install cable tray - reducer use Screw Sets CFS M6 or CFS M8

RT ... H50		1.5mm	
CODE	Length L mm	kg 1 pc	pcs
RT 50 25 15 PG	25	0,093	1
RT 50 50 15 PG	50	0,106	1
RT 50 75 15 PG	75	0,119	1
RT 50 100 15 PG	100	0,132	1
RT 50 125 15 PG	125	0,146	1
RT 50 150 15 PG	150	0,159	1
RT 50 175 15 PG	175	0,172	1
RT 50 200 15 PG	200	0,185	1
RT 50 225 15 PG	225	0,199	1
RT 50 250 15 PG	250	0,212	1
RT 50 275 15 PG	275	0,225	1
RT 50 300 15 PG	300	0,239	1

RT ... H50		1.5mm	
CODE	Length L mm	kg 1 pc	pcs
RT 50 325 15 PG	325	0,252	1
RT 50 350 15 PG	350	0,265	1
RT 50 375 15 PG	375	0,278	1
RT 50 400 15 PG	400	0,292	1
RT 50 425 15 PG	425	0,305	1
RT 50 450 15 PG	450	0,318	1
RT 50 475 15 PG	475	0,331	1
RT 50 500 15 PG	500	0,345	1
RT 50 525 15 PG	525	0,357	1
RT 50 550 15 PG	550	0,371	1
RT 50 575 15 PG	575	0,384	1

RT H50

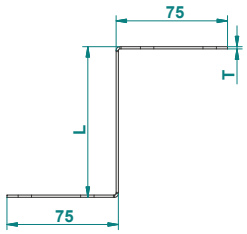

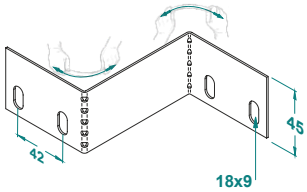

Stop End (Blind End)

Sonlandırma - Заглушка

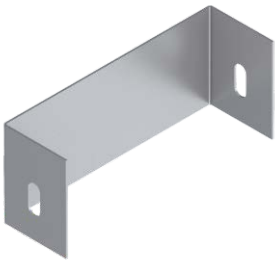

Pre - Galvanised

Important!
To install cable tray - stop end use Screw Sets CFS M6 or CFS M8

SON ... H50		1.2mm	
CODE	Width a mm	kg 1 pc	pcs
SON 505 12 PG	50	0.072	1
SON 507 12 PG	75	0.083	1
SON 510 12 PG	100	0.094	1
SON 512 12 PG	125	0.104	1
SON 515 12 PG	150	0.114	1
SON 520 12 PG	200	0.136	1
SON 522 12 PG	225	0.146	1
SON 525 12 PG	250	0.157	1
SON 530 12 PG	300	0.178	1
SON 540 12 PG	400	0.221	1
SON 545 12 PG	450	0.241	1
SON 550 12 PG	500	0.263	1
SON 560 12 PG	600	0.305	1

SON ... H50		1.5mm	
CODE	Width a mm	kg 1 pc	pcs
SON 505 15 PG	50	0.090	1
SON 507 15 PG	75	0.104	1
SON 510 15 PG	100	0.117	1
SON 512 15 PG	125	0.130	1
SON 515 15 PG	150	0.143	1
SON 520 15 PG	200	0.169	1
SON 522 15 PG	225	0.183	1
SON 525 15 PG	250	0.196	1
SON 530 15 PG	300	0.222	1
SON 540 15 PG	400	0.275	1
SON 545 15 PG	450	0.302	1
SON 550 15 PG	500	0.329	1
SON 560 15 PG	600	0.382	1

SON H50

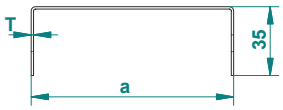

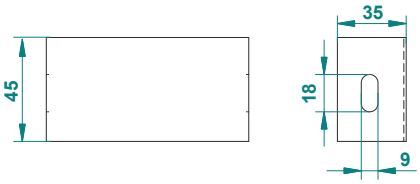

APPLICATIONS
Cable routing

MATERIAL
Steel, strip-galv. acc. to the Sendzimir method to TS-EN 10346:2011 (PG)

Available finishes:
HDG-steel, hot-dip galv. to TS-EN ISO 1461:2011 (HDG)
SS- stainless steel AISI 304L and AISI 316L (SS)
EP- powder coating in a full range of colours (RAL)

Thickn. (ga) [mm]: 0.6 | 0.8 | 1.0 | 1.2 | 1.5