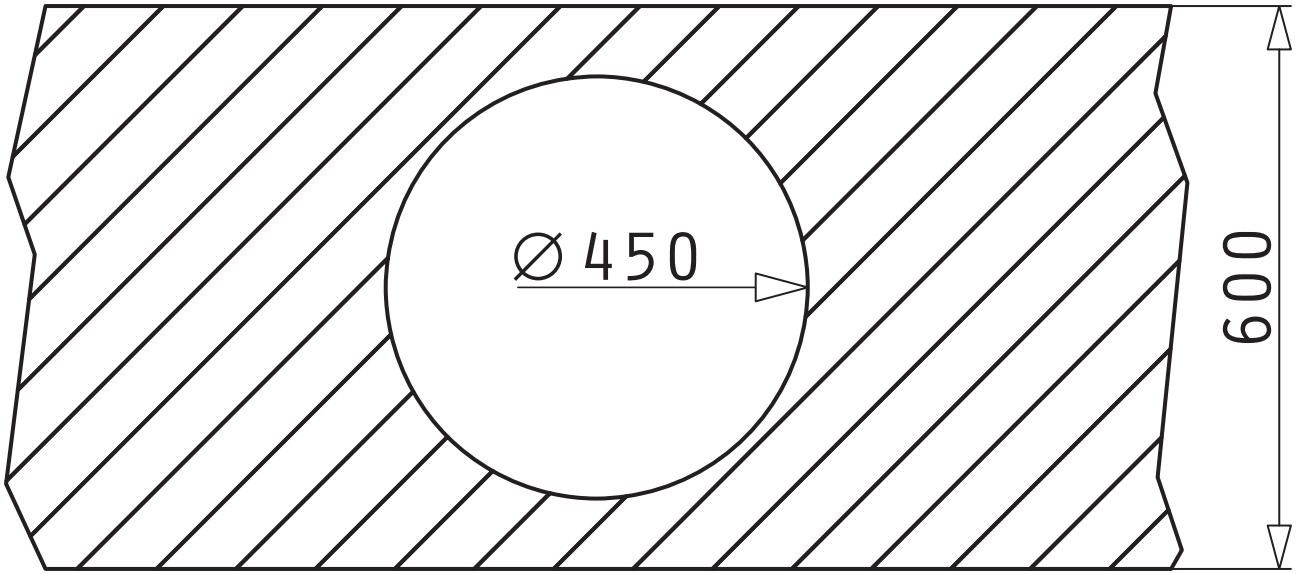
∅450
600