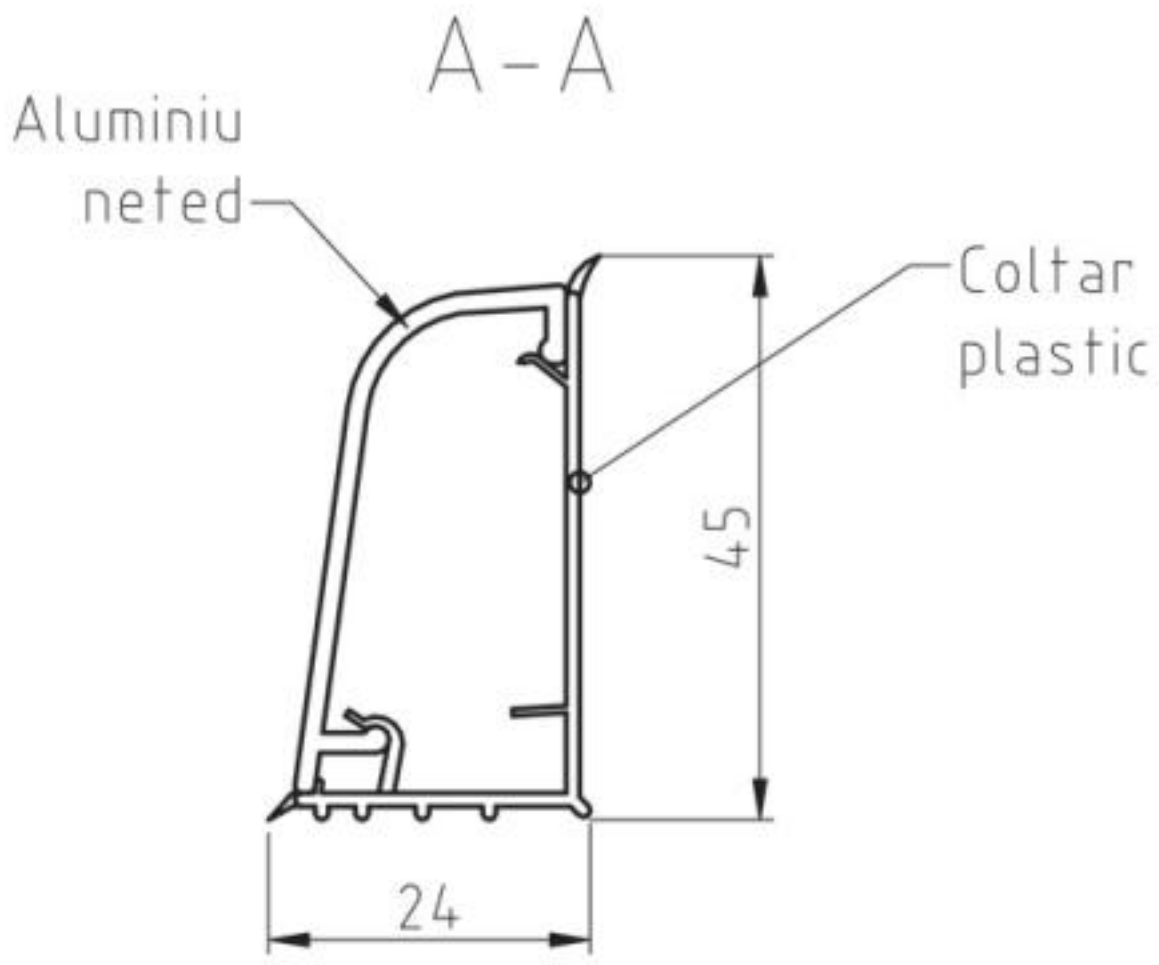
A - A
Aluminiu
neted
Coltar
plastic
45
24

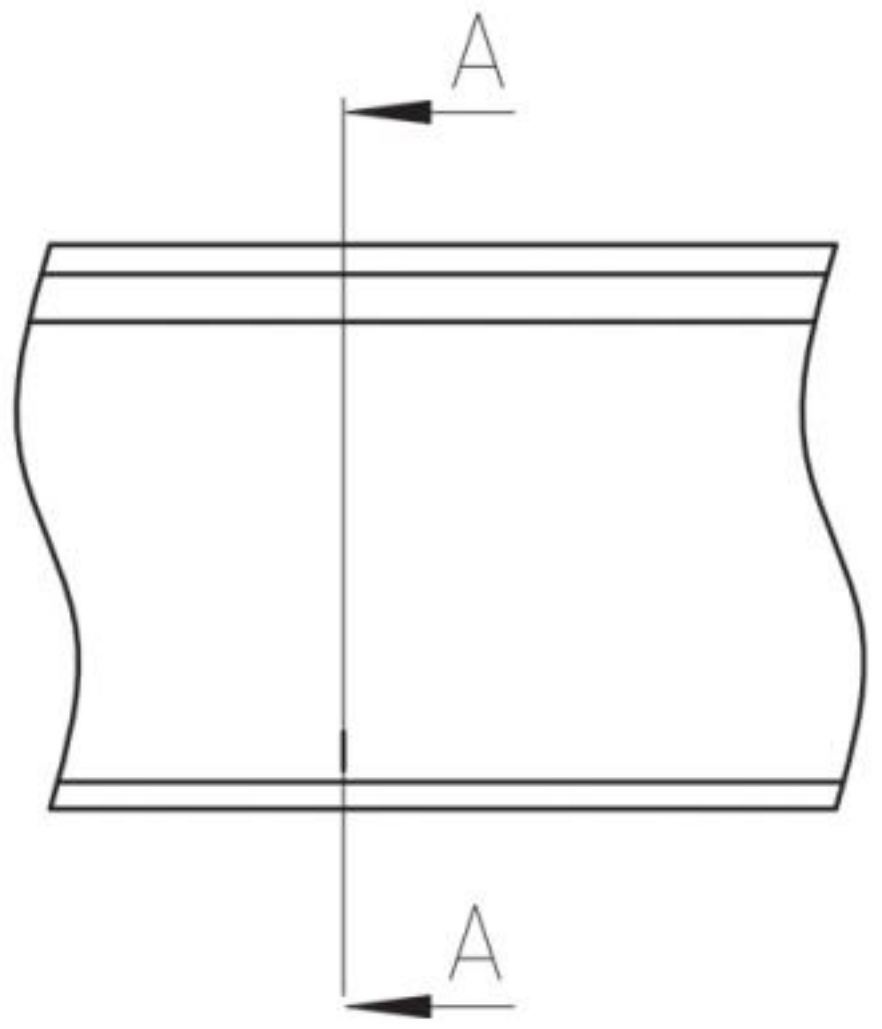
A
A