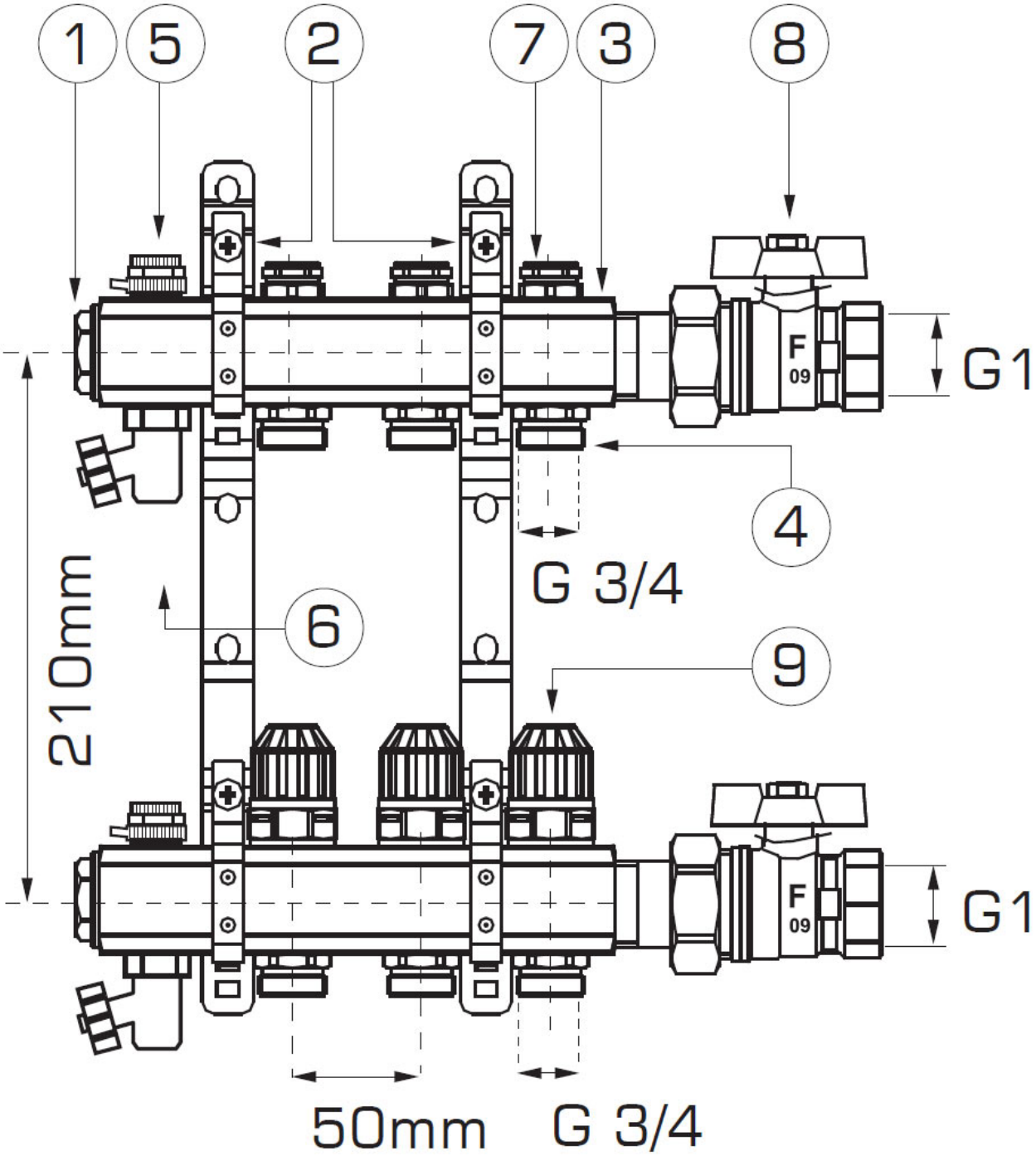
1
5
2
7
3
8
G1
4
G 3/4
210mm
6
9
G1
50mm
G 3/4