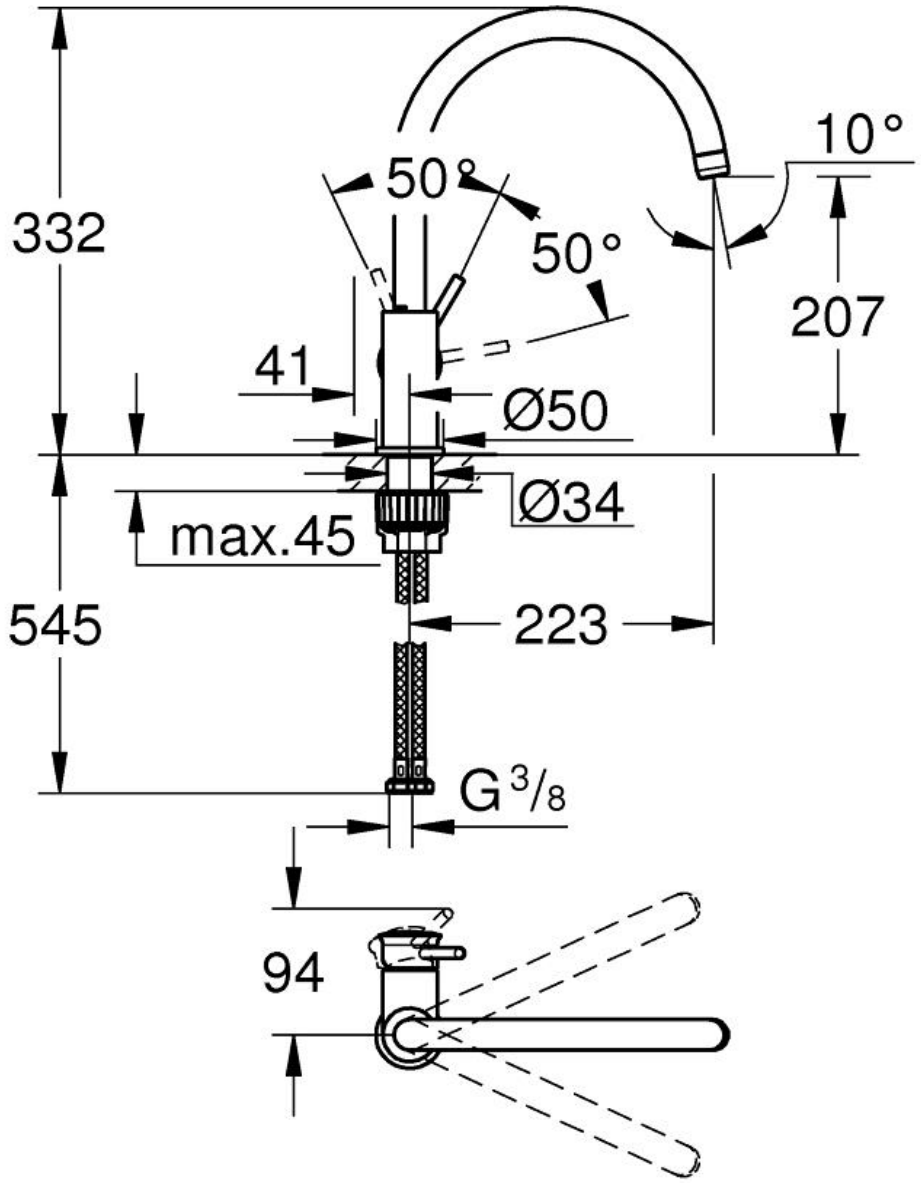
332
50°
50°
10°
207
41
Ø50
Ø34
max.45
545
223
G 3/8
94