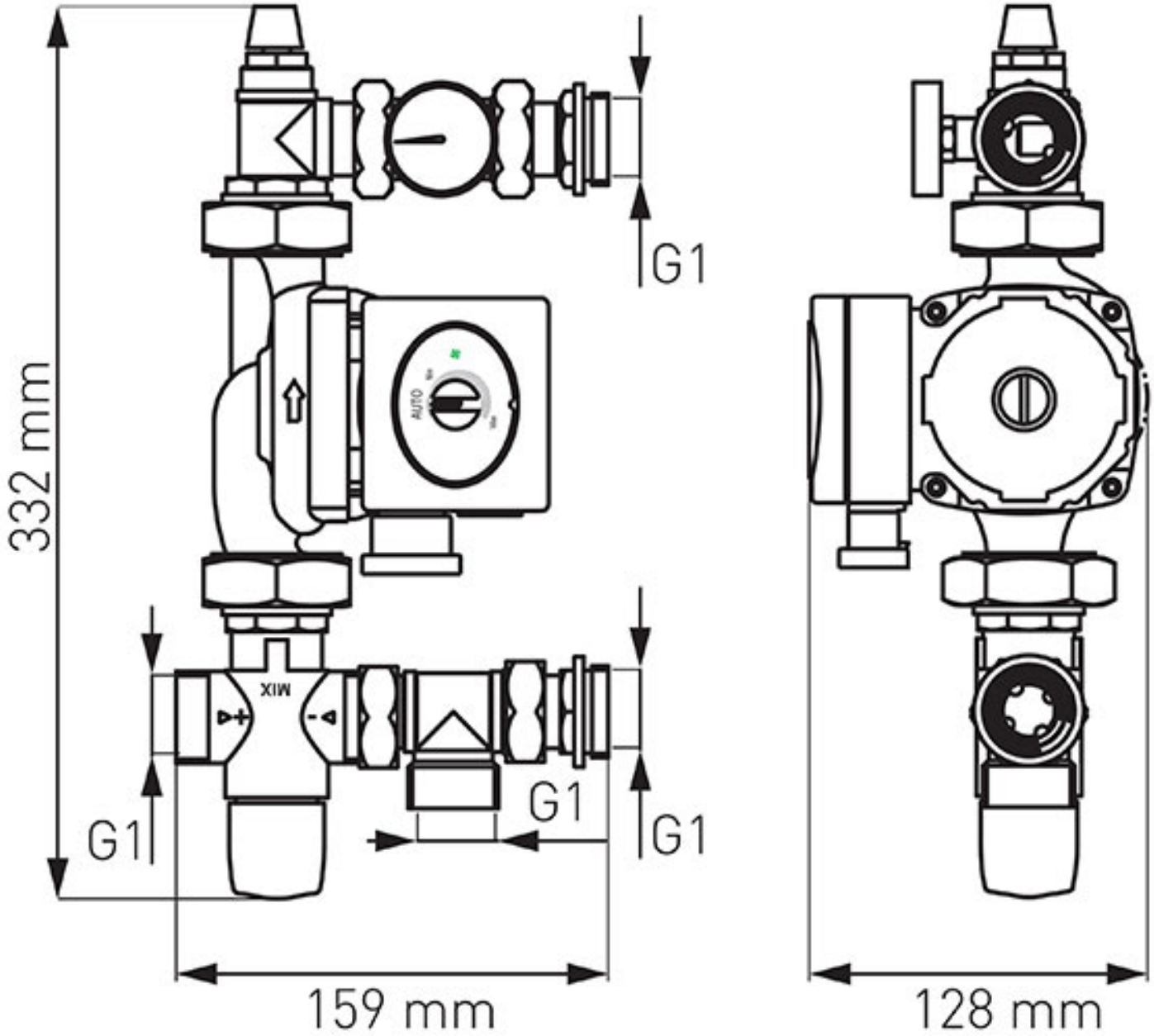
332 mm
G1
G1
G1
G1
159 mm
128 mm
AUTO
MIX