Cable Tray Covers

Cover of Cable Tray / Ladder

Kablo Kanalı ve Merdiven Kapağı- Крышка лотков и кабельростов

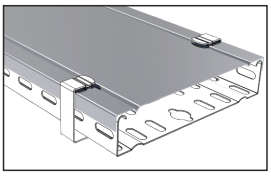

Important!

For fixing cable tray cover sections use 4 pcs of KT/1 cover clamps for 1 lenght

Pre - Galvanised

KK ...			0.6mm	
CODE	Width W mm	Length L mm	kg 1 mt	pcs
KK 05 06 PG	50	3000	0.38	2
KK 07 06 PG	75	3000	0.50	2
KK 10 06 PG	100	3000	0.62	2
KK 12 06 PG	125	3000	0.74	2
KK 15 06 PG	150	3000	0.85	2
KK 20 06 PG	200	3000	1.09	2
			0.8mm	
KK 05 08 PG	50	3000	0.51	2
KK 07 08 PG	75	3000	0.66	2
KK 10 08 PG	100	3000	0.82	2
KK 12 08 PG	125	3000	0.98	2
KK 15 08 PG	150	3000	1.14	2
KK 20 08 PG	200	3000	1.45	2
KK 22 08 PG	225	3000	1.61	2
KK 25 08 PG	250	3000	1.76	2
KK 30 08 PG	300	3000	2.08	2
			1.0mm	
KK 05 10 PG	50	3000	0.63	2
KK 07 10 PG	75	3000	0.83	2
KK 10 10 PG	100	3000	1.03	2
KK 12 10 PG	125	3000	1.22	2
KK 15 10 PG	150	3000	1.42	2
KK 20 10 PG	200	3000	1.81	2
KK 22 10 PG	225	3000	2.01	2
KK 25 10 PG	250	3000	2.20	2
KK 30 10 PG	300	3000	2.60	2
KK 40 10 PG	400	3000	3.38	2

KK ...			1.2mm	
CODE	Width W mm	Length L mm	kg 1 mt	pcs
KK 05 12 PG	50	3000	0.76	2
KK 07 12 PG	75	3000	0.99	2
KK 10 12 PG	100	3000	1.23	2
KK 12 12 PG	125	3000	1.47	2
KK 15 12 PG	150	3000	1.70	2
KK 20 12 PG	200	3000	2.17	2
KK 22 12 PG	225	3000	2.41	2
KK 25 12 PG	250	3000	2.64	2
KK 30 12 PG	300	3000	3.11	2
KK 40 12 PG	400	3000	4.06	2
KK 45 12 PG	450	3000	4.53	2
KK 50 12 PG	500	3000	5.00	2
KK 60 12 PG	600	3000	5.94	2
			1.5mm	
KK 05 15 PG	50	3000	0.95	2
KK 07 15 PG	75	3000	1.24	2
KK 10 15 PG	100	3000	1.54	2
KK 12 15 PG	125	3000	1.83	2
KK 15 15 PG	150	3000	2.12	2
KK 20 15 PG	200	3000	2.71	2
KK 22 15 PG	225	3000	3.01	2
KK 25 15 PG	250	3000	3.30	2
KK 30 15 PG	300	3000	3.89	2
KK 40 15 PG	400	3000	5.07	2
KK 45 15 PG	450	3000	5.66	2
KK 50 15 PG	500	3000	6.25	2
KK 60 15 PG	600	3000	7.42	2

KK

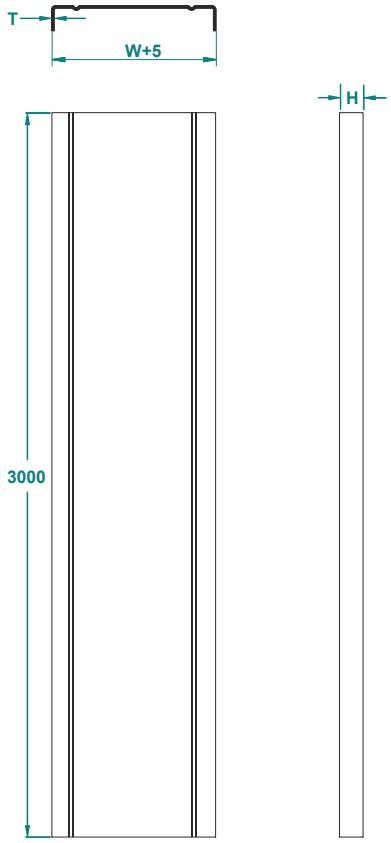

Standard Reinforced

Cover Clamp

Kapak Tutucu KT/1 Tipi - Фиксатор крышки боковой, KT/1

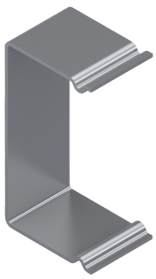

Important!

Use 4 pcs of KT/1
cover clamps for 1 lenght

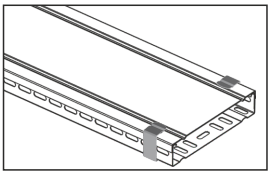

Pre - Galvanised

KT/1 ...		1.2mm	
CODE	H mm	kg 1 pc	pcs
KT/1 40 PG	40	0.031	100
KT/1 50 PG	50	0.034	100
KT/1 60 PG	60	0.037	100
KT/1 80 PG	80	0.034	100
KT/1 100 PG	100	0.037	100

KT/1

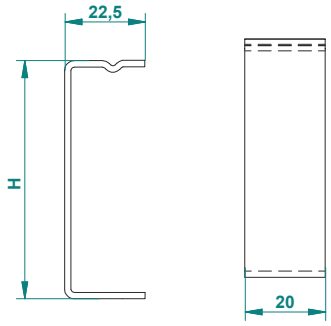

APPLICATIONS
Cable routing

MATERIAL
Steel, strip-galv. acc. to the Sendzimir method
to TS-EN 10346:2011 (PG)

Available finishes:
HDG-steel, hot-dip galv. to TS-EN ISO 1461:2011 (HDG)
SS- stainless steel AISI 304L and AISI 316L (SS)
EP- powder coating in a full range of colours (RAL)

Thickn. (ga) [mm]: 0.6 | 0.8 | 1.0 | 1.2 | 1.5